aumüller

Assembly and Commissioning Instructions

according to Machinery Directive 2006/42/EC (annex VI)

PL6 S1 24V DC AND PL10 S1 24V DC SPINDLE DRIVE FOR WINDOWS CE

Spindle drive without internal cutt-off switch - external cutt-off switch required
(control module USKM or locking drive FV3 / FVR3 / FVB3 / OFV)

ABBREVIATIONS

Index of abbreviations	
These abbreviations are used consistently throughout these assembly & operating instructions. Unless stated differently, all dimensions indicated in this document are in mm. General tolerances in accordance with DIN ISO 2768-m.	
A	drive
AK	connection cable / drive cable
AP	cover cap
BD	hinge
Fxxx	casement bracket
FAB	overall width of casement
FAH	overall height of casement
FG	casement weight
FL	casement
FÜ	casement overlap
HSK	main closing edge
Kxxx	frame bracket
L	construction lenghth of drive
MB	central hinge
NSK	side closing edge
RA	frame
RAB	overall width of frame
RAH	overall height of frame
SL	snow load
→	opening direction

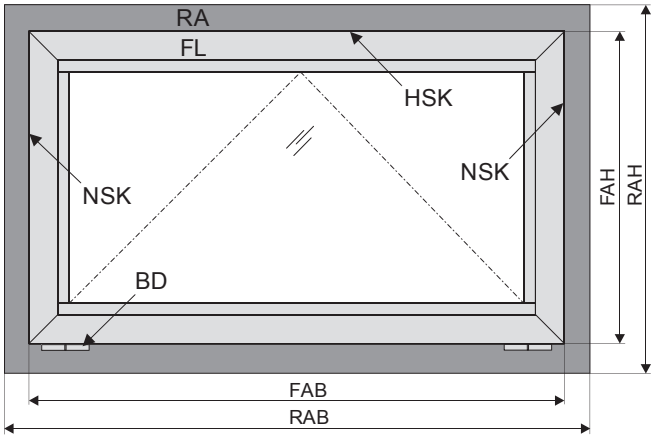

TARGET GROUP

These instructions are intended for trained personnel and operators of systems for natural smoke ventilation (NRA / SHEV) (natural smoke exhaust system / smoke and heat exhaust system) and natural ventilation via windows, who are knowledgeable of operating modes as well as the remaining risks of the system.

WARNING AND SAFETY SYMBOLS IN THESE INSTRUCTIONS:

The symbols used in the instructions shall be strictly observed and have the following meaning:

⚠ DANGER Failure to comply with the warning notes results in irreversible injuries or death.

⚠ WARNING Failure to comply with the warning notes can result in irreversible injuries or death.

⚠ CAUTION Failure to comply with the warning notes can result in minor or moderate (reversible) injuries.

NOTE Failure to comply with the warning notes can lead to damage to property.

Caution / Warning
Danger due to electric current.

Caution / Warning
Risk of crushing and entrapment during device operation (is provided as a sticker with the drive).

Attention / Warning
Risk of damage to / destruction of drives and / or windows.

⚠ WARNING Once the assembly and commissioning has been completed, the installer of a machine „power-operated window and door" shall hand these instructions over to the end-user. The end-user shall store these instructions in a safe place for further reference and use, if required.

⚠ WARNING This device is not intended for use by persons (including children) with physical, sensory or mental limitations or lacking experience and / or knowledge, unless they are supervised by a person who is responsible for the safety or were instructed by him on the usage of this equipment. Children should be supervised to ensure that they are not playing with this device.
Cleaning and operator's maintenance may not be performed by children without supervision.

01

INTENDED USE

Area of application / Scope of application

This drive is intended for the electromotive opening and closing of windows in facade and roof areas.

The main task of this product, in combination with a window and a suitable external control unit, **is to evacuate hot smoke and combustion gases in case of fire**, to safe human lives and protect material assets. Furthermore, with the electromotive operated window and a suitable external control unit, **the natural ventilation** of the building can be ensured.

NOTE

By attaching the drive to a movable element of the window a so-called "power-operated window" is created which, according to the Machinery Directive 2006 / 42 / EG, represents a machine.

Intended use according

The drive is intended for stationary installation and electrical connection at the window as part of a building.

In accordance with the Declaration of Conformity the drive, in combination with an external Control Unit from **AUMÜLLER**, is released for its proper use at a power-operated window for the following use:

- Application for natural ventilation
  - with an installation height of the drive and the bottom side of sash of at least 2,5 m above the floor, **or**
  - with an opening width at the HSK of the driven part of < 200 mm by a simultaneous speed of < 15 mm/s at the HSK in closing direction.
- Application as NSHEV (natural smoke and heat exhaust ventilator(s) for ventilation without dual purpose for ventilation in accordance with EN12101-2.

⚠ WARNING

Pay attention to possible hazards on tilting or rotating windows, whose secondary closing edges are located at less than 2,5 m installation height above the floor, under consideration of the Control Unit and usage!

We as manufacturers are well aware of our duties and responsibilities regarding the development, manufacturing and placing of safe window drives on the market and consistently implement them. Ultimately, however, we have no direct influence on the usage of our drives. Therefore, as a precaution, we point out the following:

- The **constructor or his agent** (architect, specialist planner) **are obligated to evaluate the hazards to persons**, outgoing from the usage, installation position, opening parameters and from the external Control Unit of the power operated window, already **in the planning phase and to establish necessary protective measures**.
- The **constructor / manufacturer** of the machine "power-operated window" **must implement** the planned **protective measures** at the installation site or, if not yet established, **determine them** by it´s own responsibility and detect or **minimize possible remaining risks**.

The need for a risk assessment at the installation site due to the reasonably foreseeable misuse.

A risk assessment in accordance with the Machinery Directive 2006 / 42 / EG for the usage of the power-operated window **for natural ventilation is absolutely necessary** under the following conditions:

- the installation height of the drive and lower edge of casement < 2,5 m above the floor
  and one of the following conditions:
- the opening width at the HSK > 200 mm, **or**
- the closing speed at the HSK is > 15 mm/s, **or**
- the opening speed at the HSK is > 50 mm/s, **or**
- the closing force at the HSK is > 150 N

The following flow chart can be applied, which also includes the protective measures in accordance with EN 60335-2-103/2016-05.

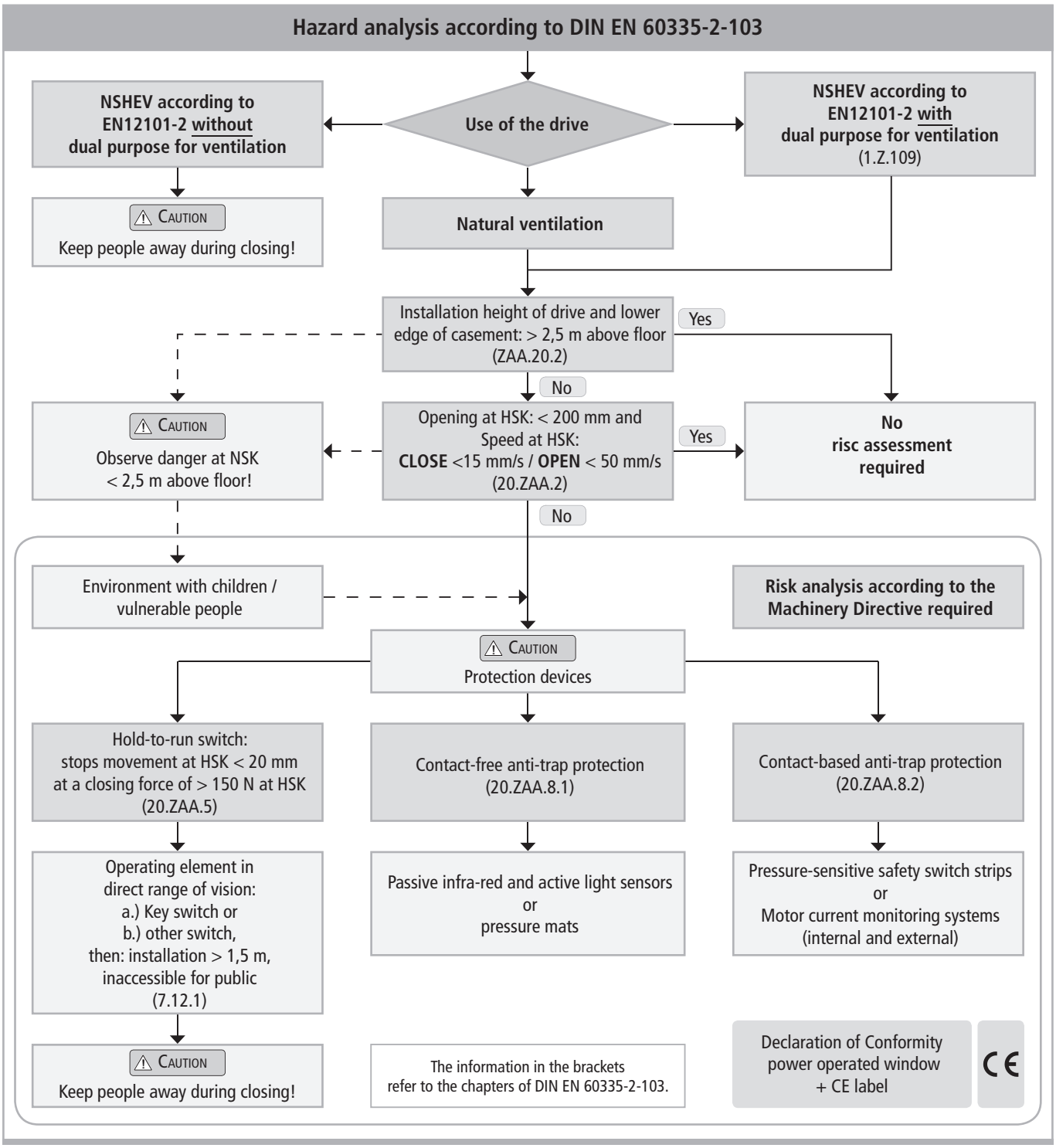

Casement data

Facade:	bottom-hung window / top-hung window / side hung window
Roof:	roof window / sky light
Opening direction:	inward opening / outward opening
Profile material:	aluminum, steel, plastic or wood.

NOTE

The casement measurements supplied are only for orientation purposes.
It is imperative that the **force-path diagram** of the drives are observed.

When inspecting the drives for conformity with on-site requirements the following items must be observed:

- total weight of casement (glass + frame),
- additional loads: snow load / wind load (suction / pressure),
- casement size (FAB x FAH),
- side ratio FAB / FAH,
- installation / inclination angle,
- required opening area (geometric / aerodynamic),
- crosswind influences,
- driving force and stroke,
- mounting site at the window frame and casement frame.

01

SAFETY INSTRUCTIONS

WARNING

It is important to follow these instructions for the safety of persons. These instructions shall be kept in a safe place for the entire service life of the products.

Risk of crushing and entrapment!
Window can close automatically!

The integrated load cut-off stops the drive during closing and opening when the drive is overloaded.
The compressive force is absolutely sufficient to crush fingers in case of carelessness.

Area of application

The drive shall only be used according to its intended use. For additional applications consult the manufacturer or his authorized dealer.

WARNING

Do not misuse the drive for other lifting operations! Do not allow children to play with this drive or its regulating and / or control units, including the remote control!

Always check whether the system complies with current regulations. Special attention must be paid to the opening width, the opening area, the opening time and the opening speed of the window, the temperature range of the drives / external devices and cables as well as the cross section of the connecting cables as function of the cable length and power consumption.

All devices must be permanently protected from dirt and moisture, if the drive is not explicitly suitable for use in wet areas (see technical data).

Installation

These instructions address expert and safety-conscious electricians and / or qualified personnel knowledgeable in electrical and mechanical drive installation.

NOTE

The safe operation, avoidance of injury to persons and damage to property, as well as risks, is only guaranteed by proper installation and setting according to these installation instructions.

All specifications for installation must be checked independently and, if necessary, adjusted at the installation site. The connection assignment, the electrical supply data (see machine plate) and performance limits (see technical data) as well as the mounting and installation instructions of the drive must be strictly observed and adhered to!

Never connect 24 V DC drives to 230 V AC mains voltage!
Danger to life!

Do not reach into the window rabbet or the operating element (chain or spindle) during installation and operation! Ensure that, based on the installation position and the opening movement of the casement, persons cannot be trapped between the driven part of the window and surrounding fixed components (e.g. wall).

Mounting material

The required mounting material must to fit with the drive and occurring load and, if necessary, supplemented.

NOTE

Before installing the drive, check whether the casement is in good mechanical condition, the weight in balance and whether it opens and closes easily!

Danger spots by crush and shear points

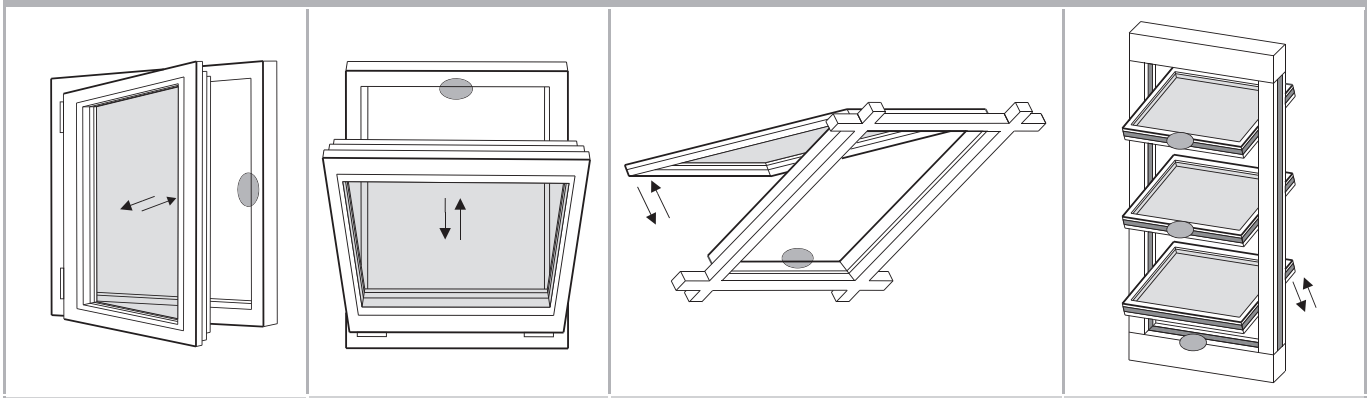

Side-hung	Bottom-hung	Roof windows / skyskylight domes	Louvre windows

Danger spots: crush and shear points according to DIN EN 60335-2-103

Crush and shear points
To avoid injuries, **crushing and shear points** between casement and frame must be secured **against entrapment up to an installation height of 2,5 meters above the floor** with appropriate measures. This can be achieved e.g. by using contact-based or contactless protective devices against entrapment, which stop the motion through contact or through interruption by a person. At a force higher than 150 N at the main closing edge the motion must stop within 20 mm. A warning symbol at the opening element must indicate this clearly.

Unintentional or independent opening or falling
Casements are to be hinged or secured such way that in case one of the mounting elements fails it will not crash / slam down or move in an uncontrolled manner by e.g. using double suspensions, safety scissors, casement stays.
Tilting windows shall be equipped with safety scissors or similar devices to avoid damages and risks of injury for persons through improper installation and operation. The safety scissors must be adjusted to the opening stroke of the drive (see technical data) to avoid blocking. The opening width of the safety scissors must be bigger than the drive stroke.

⚠ WARNING

The movable casement must be secured against unintentional or independent opening as well as falling down.

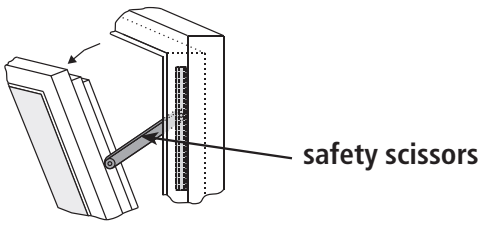

Routing cables and electrical connection
Routing or installing of electrical cables and connections may be performed only by specialist companies. Never operate drives, control units, operating elements and sensorsat operating voltages and connections contrary to the specifications of the manufacturer.
All relevant instructions shall be observed for the installation, specifically:

- VDE 0100 Setting up high-voltage systems up to 1000 V
- VDE 0815 Wiring cables
- Specimen Guideline on Conduits German designation (MLAR).

All-pole disconnecting devices shall be installed in the permanent electrical installation or external Control Unit for the drive.
The mains supply lines 230 V / 400 V AC shall be protected separately!

24V DC drives may only be connected to power supply sources that comply with SELV specifications.

NOTE

In the case of tandem / multiple operation of drives connected in series, the cross-section of the connection cable must be checked autonomously, depending on the total current consumption of the drive system.

⚠ WARNING

Damaged mains supply lines of drives with plug connectors may only be replaced by the manufacturer or qualified service / maintenance personnel!
Power cables which are fixed to the drive casing cannot be replaced. If the cable is damaged the device must be scrapped!

The types of cable, cable lengths and cross-sections shall be selected in accordance with the manufacturer's technical data. If necessary, the cable types shall be coordinated with the competent local authorities and energy supply companies. Low-voltage lines (24 V DC) shall be routed separate from the high-voltage lines. Flexible cables may not be flush-mounted. Freely suspended cables shall be equipped with strain reliefs.

Cables must be laid such way that they cannot be sheared off, twisted or bent during operation. Drive cables laid inside window profiles must be protected by insulating tubes with a sufficient temperature resistance. Through holes shall be equipped with cable sleeves!

Clamping points shall be checked for tightness of threaded connections and cable ends. Access to junction boxes, clamping points and external drive control boxes shall be ensured for maintenance work.

01

Commissioning, operation and maintenance
After the installation and after each modification in the set up all functions shall be checked with a trial run. It shall be ensured that drive and casement are set correctly and that security systems, if available, are functioning properly. **After the installation of the system is completed the end-user shall be introduced to all important operating steps.** If necessary, he must be advised of all remaining risks / dangers.
The end-user shall be specifically instructed that no additional forces, except pushing and pulling forces in the opening and closing direction of the casement, may be applied to the spindle, chain or lever of the drive.

NOTE Post warning signs!

During cleaning and maintenance works and while exchanging parts, all poles of the drive must be disconnected from the power supplyand and secured against unintentional reactivation.

⚠ CAUTION Other persons must be kept away from the casement when a hold-to-run switch (pushbutton) is operated or when a window, which has been opened by a smoke and heat exhaust system, is closing!

⚠ CAUTION The operating element of hold-to-run switches must be installed within direct view from the window, but apart from moving elements. If the switch is not a key-operated switch it must be installed at a minimum height of 1,5 m and inaccessible to the public!

⚠ CAUTION Do not allow children to play with permanently mounted control devices and keep remote controls out of reach for children!

During cleaning, maintenance work and while exchanging parts the drive must be completely disconnected from the power supply and secured against unintentional reactivation.

⚠ WARNING Do not actuate the drive or the casement when repair or re-setting works are performed!

Replacement parts, fasteners and controls
The drive shall only be operated with control devices from the same manufacturer. There is no liability, warranty or customer service if third-party parts are used. Exclusively original replacement parts of the manufacturer shall be used for mounting elements or expansions.

Ambient conditions
The product may not be subjected to impacts or falls, or to vibrations, moisture, aggressive vapors or other harmful environments, unless the manufacturer released it for one or more of these environmental conditions.

- **Operation:**
  Ambient temperature: -5 °C … +60°C
  Relative humidity: < 90% less 20°C;
  < 50% less 40°C;
  no formation of condensation

NOTE Observe temperature range during installation!

- **Transport / Storage:**
  Storage temperature: -5°C … +40°C
  Relative humidity: < 60%

Accident prevention regulations and workmen's compensation insurance guidelines
For work on or in a building or building part the provisions and instructions of the respective accident prevention regulations (local workmen's compensation insurance guidelines) shall be observed and adhered to.

Declaration of Conformity and of Incorporation
The drive is manufactured and inspected in accordance with European guidelines. The respective Declaration of Conformity and of Incorporation is on hand.
In case that the use of the drive differs from the intended use, a risk evaluation for the power operated window shall be performed and a Declaration of Conformity according Machinery Directive 2006 / 42 / EG issued.

aumüller

DATA SHEET PL6 / PL10 S1 24V DC

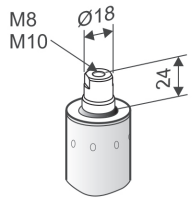

OPTION

- Application: natural ventilation, SHEV, ferralux®-NSHEV
- Force: PL6 = 600 N / PL10 = 1000 N
- Without internal cutt-off switch – external cutt-off switch required! (control module USKM or locking drive FV3 / FVR3 / FVB3 / OFV1)

Options

- Rear eye bolt, spindel tube with interior thread for clevis

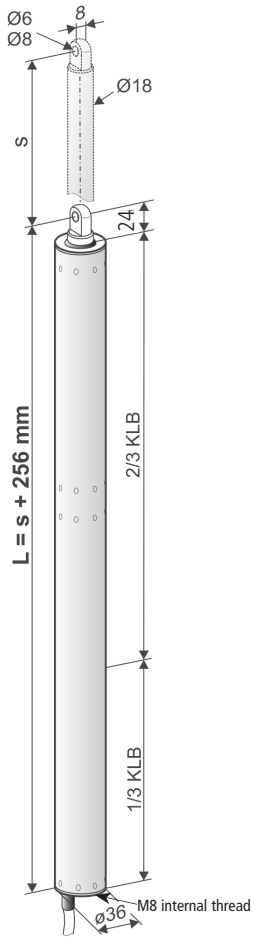

TECHNICAL DATA

U_N	Rated voltage	24V DC (19 V ... 28 V)
I_N	Rated current	0,6 A
I_A	Cut-off current	0,8 A
P_N	Rated power	15 W
DC	Duty cycle	5 cycles (ED 20% - ON: 2 min. / OFF: 8 min.)
	Protection rating	IP 65
	Ambient temperature range	-5 °C ... +60 °C
F_Z	Pulling force max.	PL6 = 600 N PL10 = 1000 N
F_A	Pushing force max.	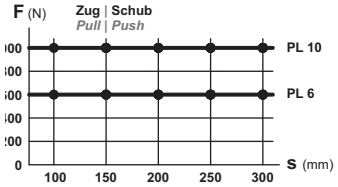
F_H	Pullout force	5000 N (fastening depended)
	Spindle tube	stainless steel
	Connecting cable	non-halogen, grey 2 x 0,75 mm², ~ 3 m
v	Speed	PL6 5,8 mm/s 5,8 mm/s PL10 2,6 mm/s 2,6 mm/s
s	Stroke	100 – 300 mm
L	Length	s + 256 mm see order data
	Sound pressure level	≤ 70 dB (A)

OPTION

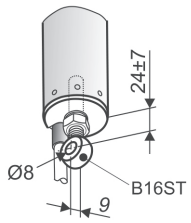

02

ORDER DATA

s [mm]	L [mm]	Version	Finish	PU/pcs.	Part.-No.
100	356	PL6 100 S1	E6/C-0	1	**562010**
		PL10 100 S1		1	**565010**
150	406	PL6 150 S1	E6/C-0	1	**562015**
		PL10 150 S1		1	**565015**
200	456	PL6 200 S1	E6/C-0	1	**562020**
		PL10 200 S1		1	**565020**
250	506	PL6 250 S1	E6/C-0	1	**562025**
		PL10 250 S1		1	**565025**
300	556	PL6 300 S1	E6/C-0	1	**562030**
		PL10 300 S1		1	**565030**

OPTIONS

Special model	PU/pcs.	Part.-No.
Front suspension		
Pushing rod end with interior thread M8	1	**515061**
Pushing rod end with interior thread M10	1	**515060**
Drive housing painted/powder coated in other RAL colours		
Lump sum for coating		**516030**
Specify at order stage:	1 - 20	**516004**
	21 - 50	**516004**
	51 - 100	**516004**
	up 101	**516004**
Extra length connecting cable:		
5 m – non-halogen, grey – 2 x 0,75 mm²		**501024**
10 m – non-halogen, grey – 2 x 0,75 mm²		**501026**

Accessories for fron / rear suspension	PU/pcs.	Part.-No.
Rear Suspension		
B16ST Eyebolt Ø8 mm, galvanized	1	**100044**
B16VA Eyebolt Ø8 mm, stainless steel	1	**100144**
B27ST clevis M8x16 mm, galvanized, Grubscrew M8x45 mm	1	**105510**
External cutt-off switch		
Control module USKM (up to max. s 300 mm)	1	**512140**

EXPLANATIONS ON THE PRODUCT LABEL

The product label informs about:

- manufacturer's address
- article reference number and name
- technical caracteristics
- date of manufacturing with firmware version
- certifications
- serial number

NOTE Never install and operate damaged products.

In the event of any complaints, please indicate the product serial number (SN) (see product label).

Exemplary representation

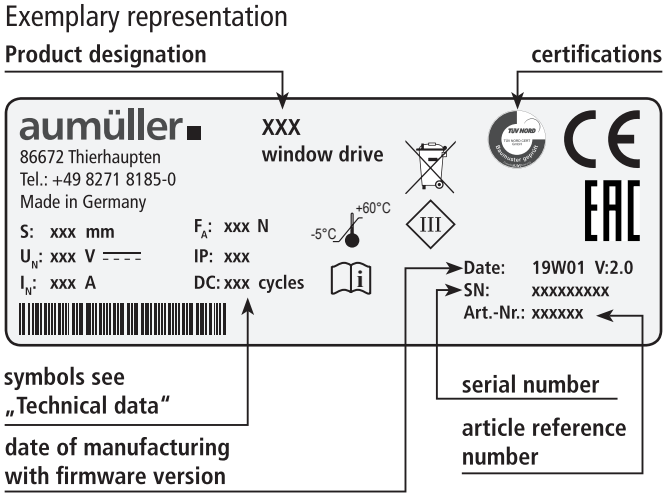

aumüller

MOUNTING APPLICATIONS, CASEMENT SIZES AND MOUNTING APPLICATIONS

Areas of application and casement sizes:

Mounting of drives up to a casement size of max. 4m² (depending on the system)

Top-hung and bottom-hung casement - inward opening		Top-hung and bottom-hung casement - outward opening	
FAB max. = 1200 mm / solo = 2500 mm / tandem	FAH max. = 2500 mm	FAB max. = 1200 mm / solo = 2500 mm / tandem	FAH max. = 2500 mm

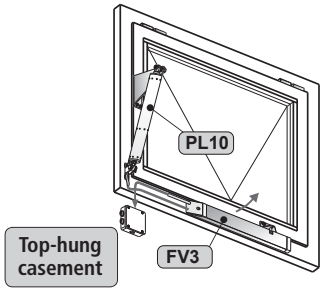

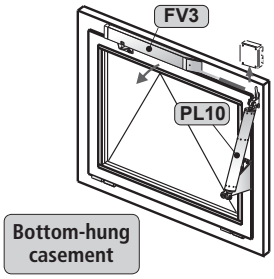

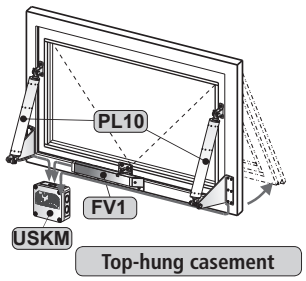

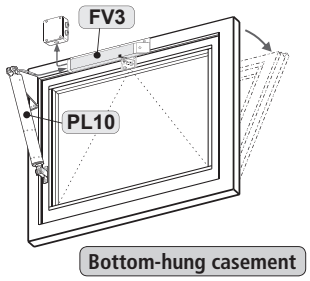

Mounting applications

RWA1000 solo - inward opening

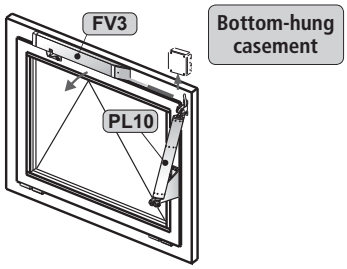

RWA1000 solo - inward opening

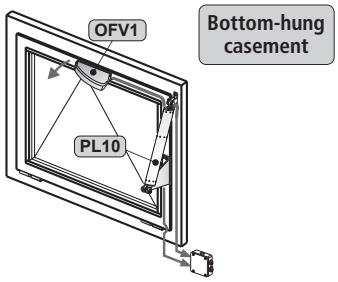

RWA1000 tandem - inward opening

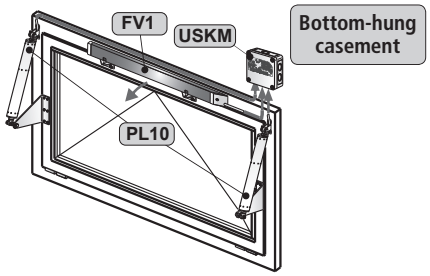

RWA1000 Solo - inward opening

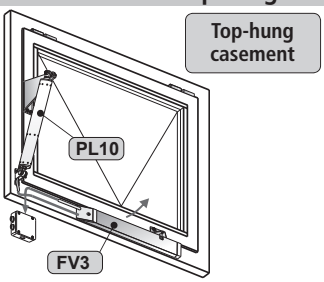

RWA1000 solo - inward opening

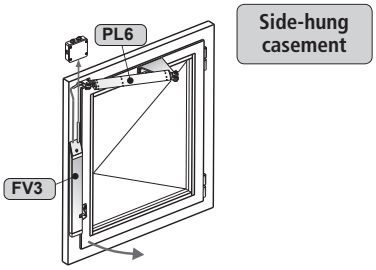

RWA1100 solo - outward opening

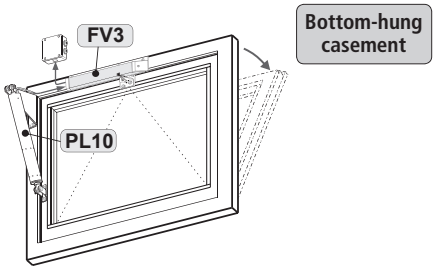

RWA1100 solo - outward opening

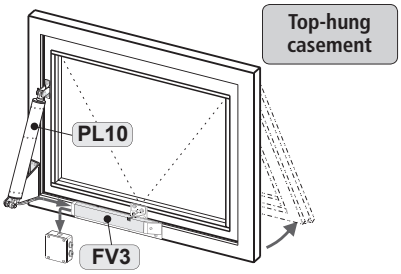

RWA1100 tandem - outward opening

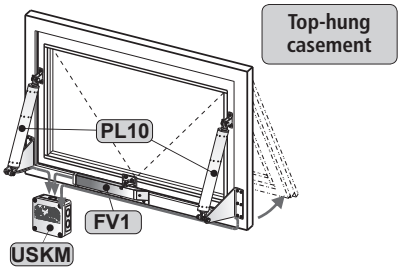

RWA1100 solo - outward opening

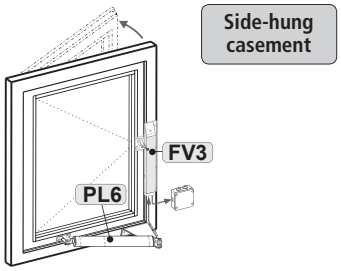

RWA1050 solo - inward opening

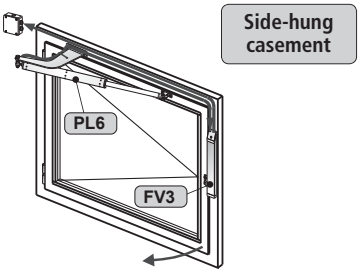

RWA1050 tandem - inward opening

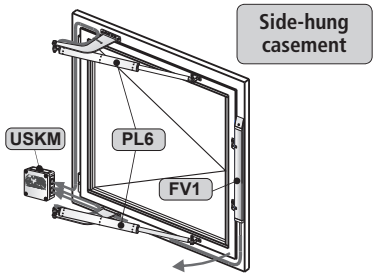

RWA1050 tandem - inward opening

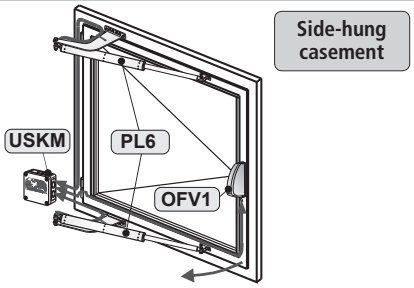

INSTALLATION STEP 1: INSPECTION BEFORE THE INSTALLATION

⚠ WARNING

Important instructions for a safe installation. Observe all instructions, wrong installation may result in serious injury!

Storage of drives at the construction site

Protective measures against damages, dust, moisture or contamination shall be taken. Store drives intermediately only in dry and well ventilated rooms.

Inspection of drives before installation

Check drives and window before installation for good mechanical condition and completeness. The chains / spindles of the drives must be extendable or retractable easily. The casement must run smoothly and the weight must be in balance.

NOTE

We recommend the use of our test kit for the inspection of drives with the rated voltage 24V= / 230V~ (see table below). Damaged products may not be operated under any circumstance.

Test kit for drives	
Order number:	**533981**
Application:	Test kit to check running direction and communication of drives 24V DC or 230V AC (including batteries)
Supply voltage:	230V AC
Drive types:	24V DC / 230V AC
Drive current:	max. 3 A
Display:	drive current, battery charge
Ambient temperature:	-5 °C ... + 40 °C
Plastic housing:	250 x 220 x 210 mm
Weight:	approx. 3,6 kg
Feature / equipment:	Control elements: 2 switches + 1 button

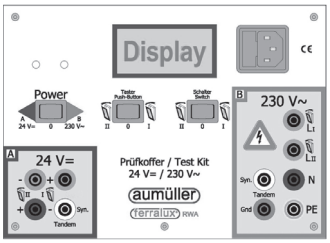

The test procedure of drives may only be performed on a non-slip and secured mat or a test fixture. During the test run the test element must not be interfered with. The test my only be conducted by or under the supervision of expert personnel.

For testing chain drives the chain must be extended and retracted at an angle of approx. 90°. The spindle tubes of spindle drives in round housing tubes must be secured against independent spinning before starting the test to avoid deviations in the position encoder.

Inspection of the intended use

The planned use of the drive must be checked for compliance with its intended use. If used otherwise the liability and warranty claim expires.

Predictable misuse

It is imperative that foreseeable misuse of drives is avoided! Here are a few examples:

- do not connect 24 V DC drives to a 230 V AC mains voltage,
- observe synchronous run and sequence control by drives with multiple interconnection,
- use drives only indoors,
- avoid additional force influences, e.g. transverse forces.

Testing mechanical requirements

Prior to the start of the installation check whether :

- the support surface and the profile static for the load transmission is sufficient,
- a support construction for the secure fastening of the drives is required,
- cold bridges (thermal separation) are avoidable at action points,
- there is sufficient space for the swivel movement of the drive.

If not, counter measures must be taken!

⚠

The support surface of the frame brackets or casement brackets must rest completely on the window or frame profile. There must be no tilting of the fastening elements during extension and retraction of the drives. A safe and solid fastening must be ensured at the window profile.

⚠ CAUTION

It is imperative that the sufficiently mechanical stiffness of the fastener type as well as of the swivel range of the drive is observed.
If this is not guaranteed another type of fastening or another type of drive must be selected.

INSTALLATION STEP 2: INSTALLATION PREREQUISITE AND INSTALLATION PREPARATION

The following conditions must be fulfilled for the installation of the drives so they can be properly assembled with other parts and constructed to a complete machine at the window without impairing the safety and health of persons:

1. The design of the drive must fulfill the requirements.
2. The fastening accessories (casement brackets or frame brackets) must fit the window profile; the profile-dependent hole lay-out must be complied with.
3. The space required for the installation of the drive on the frame and casement profile must be sufficient.
4. The window must be in perfect mechanical condition before the installation. It should open and close easily.
5. The fastening material for the installation of the drive must fit the window material (see table).

Wood windows	Wood screws: i.e. DIN 96, DIN 7996, DIN 571 round head with slot, round head with cross, hex head,special type	
steel, stainless steel, aluminum windows	Self-tapping screws, thread screws, sheet-metal screws i.e. ISO 4762, ISO 4017, ISO 7049 , ISO 7085, DIN 7500 cylinder head with hex socket, internal serration (Torx), Phillips head or external hex head blind rivet nut	
plastic windows	Screws for plastic i.e. DIN 95606, DIN 95607, ISO 7049, ISO 7085, DIN 7500 round head with cross, external hex head, Torx	Recommendation: if possible, screw through two cavity webs

Tools required

- Marker,
- Grains,
- Hammer,
- Screwdriver (slotted-head, cross or Torx),
- Hexagonal wrench,
- Torque wrench,
- Power drill,
- Threadlock adhesive,
- possibly a tool for blind rivet nuts (size 6).

Check window data on site

- Measure FAB and FAH.
- Check / calculate weight of casement.
  If unknown, it can be determined approximately with the following formula:

G (Casement weight) [kg] = **FAB** [m] * **FAH** [m] * **Glass thickness** [mm] * **2,5** glass-density * **1,1** frame share

- Check / calculate the required drive force and compare with drive data . If unknown, it can be determined approximately with the following formula:

F [N] = **Facade** $\frac{5{,}4 * G\,[kg] * s\,[m]}{a\,[m]}$

F [N] = **Roof** $\frac{5{,}4 * G\,[kg] * FAH\,[m]}{a\,[m]}$

a = Distance of action point to hinges
F = Drive force
s = Stroke

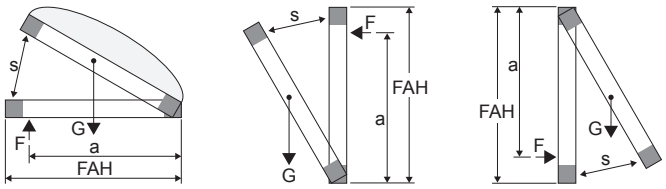

Scope of delivery:

Prior to assembly, check items quantity in the delivery for completeness.

Accessories for Spindle Drive	
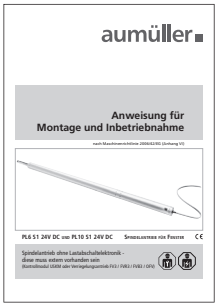	Assembly and Commissioning Instructions
	Warning sign sticker „Risk of entrapment" (1x)

Installation step 3a: Determine the casement brackets

Hole layout for casement brackets	
Casement bracket F11ST / F11VA	Casement bracket F13
NSK 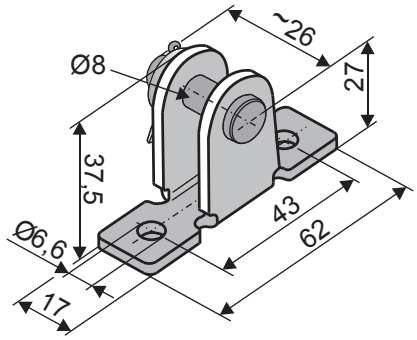	NSK 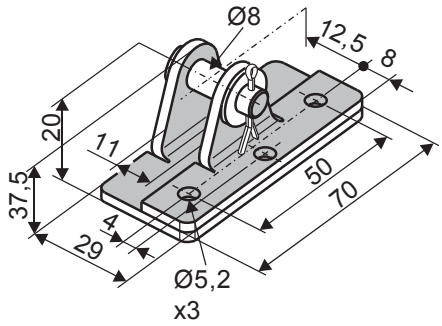
Suspension with **bore Ø 8 mm**	Suspension with **bore Ø 8 mm**

Accessories

Accessories	
Eye bolt B16ST / B16VA	Clevis B27ST
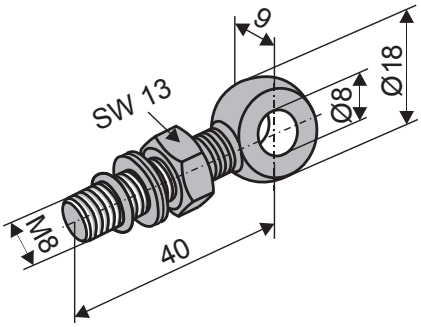	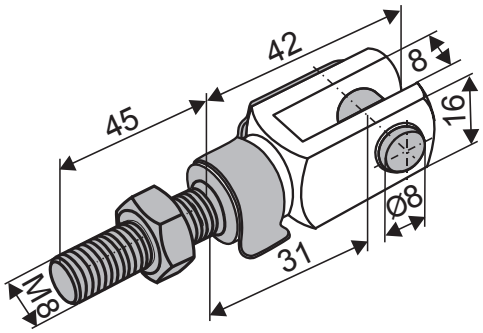
with **M8 thread**	with **M8 thread**

INSTALLATION STEP 3B: DETERMINE THE FRAME BRACKETS

Hole layout for casement brackets

Frame bracket K15

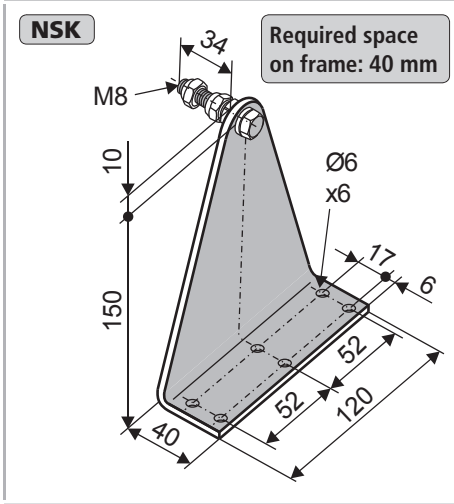

Suspension with **bore Ø 8 mm**

Frame bracket K15-Set

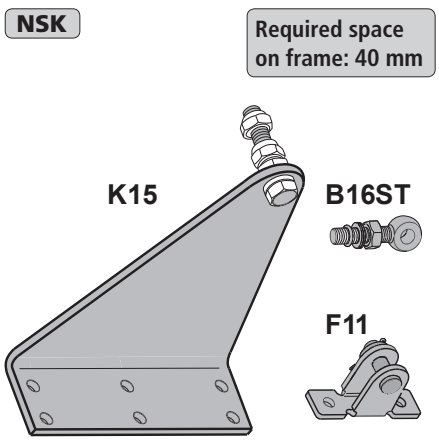

Suspension with **bore Ø 8 mm**

Frame bracket K16

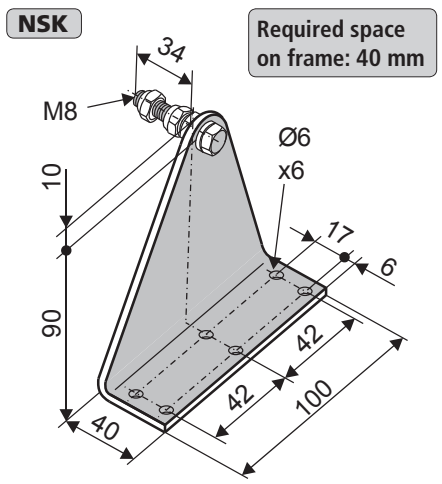

Suspension with **bore Ø 8 mm**

Frame bracket K37

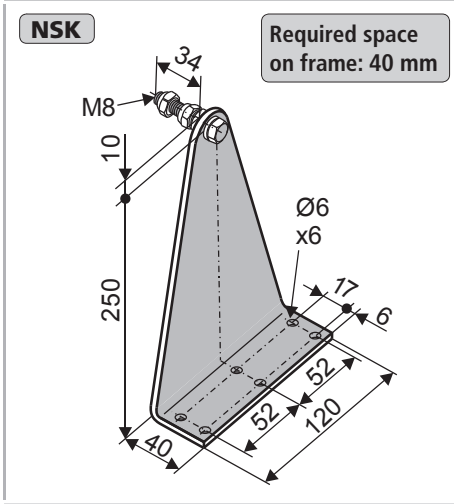

Suspension with **bore Ø 8 mm**

Frame bracket K97L

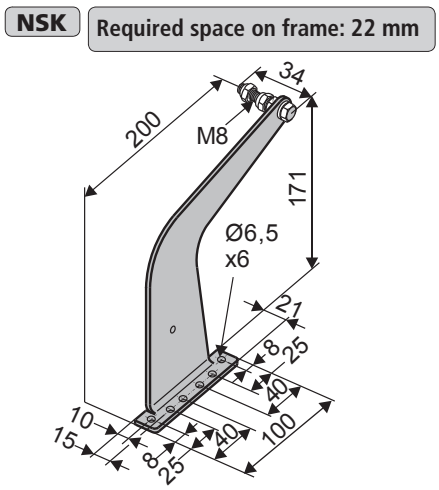

Suspension with **bore Ø 8 mm**

Frame bracket K97R

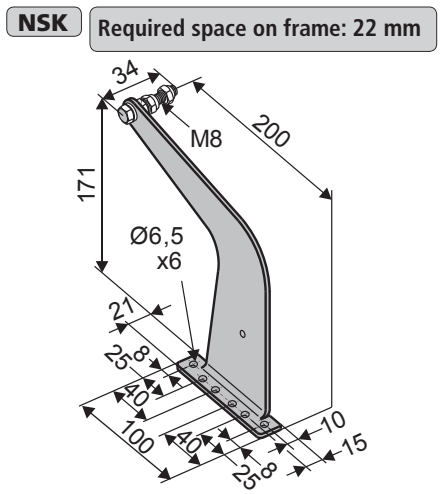

Suspension with **bore Ø 8 mm**

Frame bracket K1050L

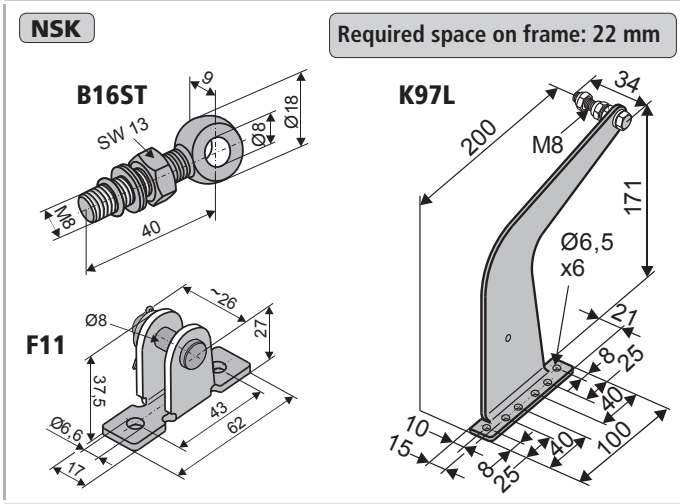

like **RWA1050 hardware system**

Frame bracket K1050R

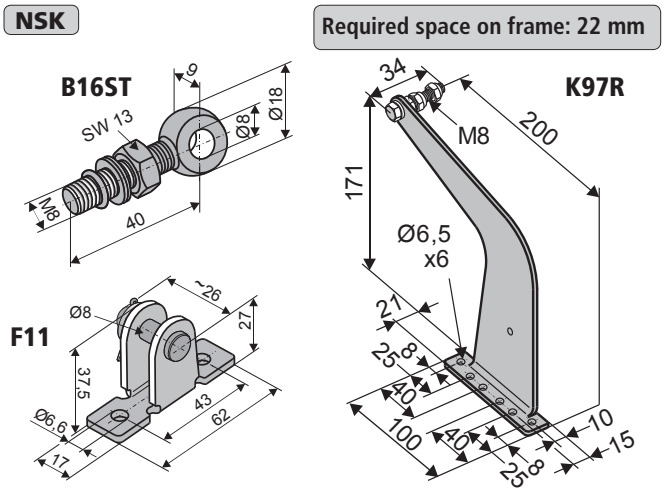

like **RWA1050 hardware system**

Installation step 4a: Hole layout and planning for side-closing edge operation (inward opening)

Opening width and opening angle for inward opening windows

Bottom-hung / top-hung / side-hung casement - inward opening

- Calculate cable size.
- For tandem operation with control modul „**KM**"
- This planning table shall be a guide to help determine the most appropriate drive stroke for the desired opening width. For the exact calculation of the opening width/area the window sections and information on the mounting location are needed.

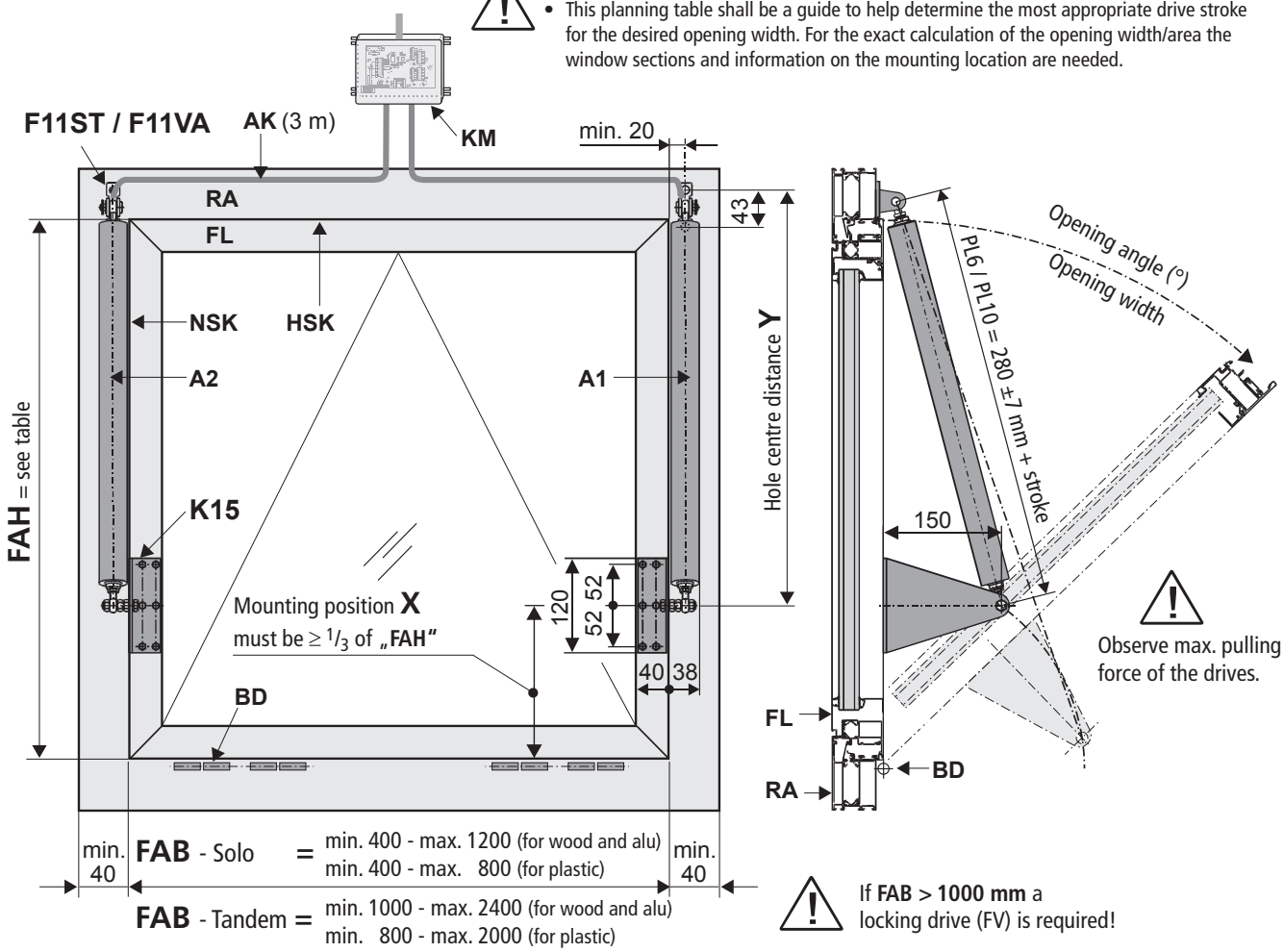

Special features RWA 1000

- For natural ventilation, smoke and heat exhausting and ferralux® NSHEV (EN12101-2)
- Siutable for inwards opening bottom/top/side-hung windows
- Large opening angles relized with short strokes and opening times due to the mounting of the spindle drives at an acute angle to the side closing edge
- Maximum opening angles and balanced force-stroke ratio with K15 mounted on the side closing edge of the casement profile at app. 1/3 of the casemnet lenght related to the hinge side
- Other combinations of various spindle drives in SOLO or TANDEM arrangements with locking actuators for actuating of window profile-specific hardware systems on request

MOUNTING DIMENSION OF RWA 1000 FOR BOTTOM-HUNG / TOP-HUNG INWARD OPENING WINDOWS

Mounting dimension of RWA 1000 for bottom-hung / top-hung inward opening windows

Hardware set	Frame bracket	Stroke of the opening drive	CASEMENT CLOSED			Mounting dimension „X" (*1 (*2	FAH (NSK) (side closing edge)	Opening angle	Opening width	CASEMENT OPEN			Weight of the casement (max.)		Required space on the window frame		FAB (HSK)
			Angle of the drive force application	Applied force at the drive fixing point						Angle of the drive force application	Applied force at the drive fixing point						
				PL6	PL10						PL6	PL10	PL6	PL10	NSK	HSK	
			[DEG]	[N]	[N]	[mm]	[mm]	[DEG]	[mm]	[DEG]	[N]	[N]	[Kg]	[Kg]	[mm]	[mm]	
RWA 1000 (*3	K15	100	19	195	326	200	560	25	242	48	447	745	32	53	40	40	Depends of the used locking drive (*4
						250	610	22	233	47	442	736	36	60			
						300	660	20	229	47	437	729	40	66			
						400	760	17	225	46	430	717	45	75			
						500	860	15	225	47	442	736	51	86			
						600	960	13	217	45	422	703	53	88			
		150	16	165	276	225	645	34	377	57	503	838	35	58	40	40	
						275	695	30	360	55	490	817	39	65			
						325	745	28	360	54	487	811	42	71			
						450	870	23	347	52	474	790	49	82			
						550	970	20	337	51	467	778	53	88			
						650	1070	18	335	50	462	769	56	93			
		200	15	155	259	250	720	42	516	64	541	902	38	63	40	40	
						300	770	38	501	62	531	885	41	69			
						350	820	35	493	61	523	872	45	74			
						400	870	32	480	59	516	861	47	79			
						500	970	27	453	57	503	839	52	86			
						600	1070	24	445	56	497	829	56	93			
						700	1170	22	446	55	491	818	59	98			
						800	1270	20	441	54	486	810	61	102			
		250	13	135	225	275	795	50	672	71	567	945	39	65	40	40	
						325	845	45	647	68	557	928	43	71			
						375	895	41	627	66	549	915	46	77			
						425	945	38	615	65	544	906	49	81			
						550	1070	31	572	62	528	880	54	90			
						650	1170	28	566	60	519	865	58	96			
						750	1270	25	550	59	513	854	61	101			
						850	1370	23	546	58	507	844	63	105			
		300	12	125	208	300	870	56	817	77	584	973	40	67	40	40	
						350	920	51	792	74	576	959	44	73			
						400	970	46	758	71	569	948	47	78			
						450	1020	43	748	69	561	935	50	83			
						500	1070	40	732	68	555	925	52	86			
						600	1170	35	704	65	544	907	56	93			
						700	1270	31	679	63	536	893	59	98			
						800	1370	28	663	62	529	882	62	103			
						900	1470	26	661	61	523	872	64	107			
						1000	1570	24	653	60	519	864	66	110			

(*1 Mounting meaurse „**X**" = distance **K15** to **hinge side** (≥ 1/3 FAH)
(*2 Other mounting meaurse and wing heights on request

(*3 For RWA1000TE (tandem) the drive forces and the max. window weigths are doubled!
(*4 FV1 – 1x = 450 mm
FV1 – 2x = 1200 or 2000 mm
FV1 – 3x = 2000 mm

INSTALLATION STEP 4B: HOLE LAYOUT AND PLANNING FOR SIDE-CLOSING EDGE OPERATION (OUTWARD OPENING)

Opening width and opening angle for outward opening windows

Bottom-hung / top-hung / side-hung casement - outward opening

The axis force of the drive must be in front of the casement hinge pivot point!

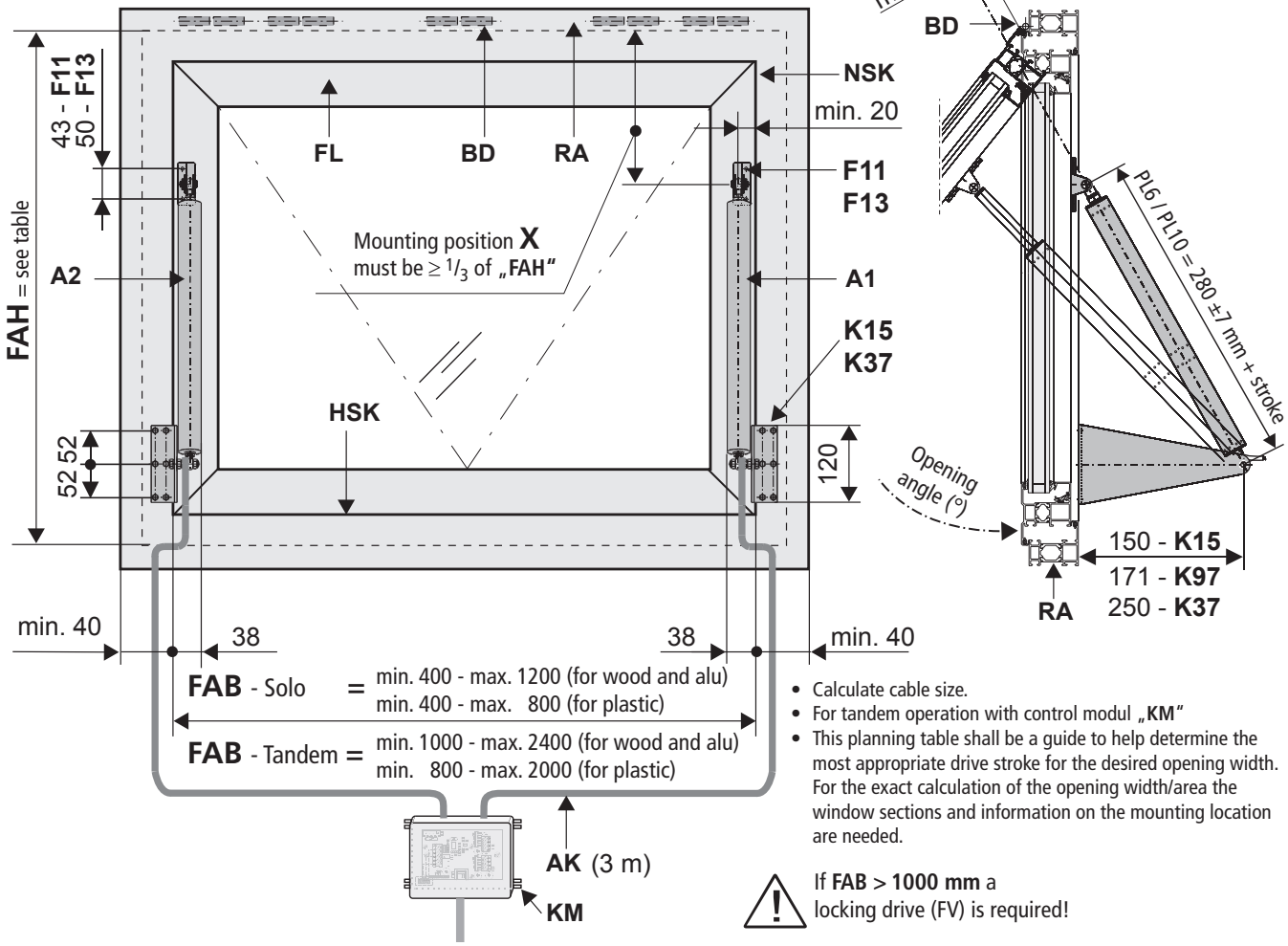

- Calculate cable size.
- For tandem operation with control modul „**KM**"
- This planning table shall be a guide to help determine the most appropriate drive stroke for the desired opening width. For the exact calculation of the opening width/area the window sections and information on the mounting location are needed.

If **FAB > 1000 mm** a locking drive (FV) is required!

Special features RWA 1100

- For natural ventilation, smoke and heat exhausting and ferralux® NSHEV (EN12101-2)
- Siutable for outward opening bottom/top/side-hung windows
- Large opening angles relized with short strokes and opening times due to the mounting of the spindle drives at an acute angle to the side closing edge
- Maximum opening angle and balanced force-stroke ratio with casement bracket F11 mounted on the side closing edge of the casement profile at:
  - app. 1/2 of the casement lenght if using K15
  - app. 1/3 of the casemnet lenght related to the hinge side if using K37
- Other combinations of various spindle drives in SOLO or TANDEM arrangements with locking actuators for actuating of window profile-specific hardware systems on request
- Use for skylights on request

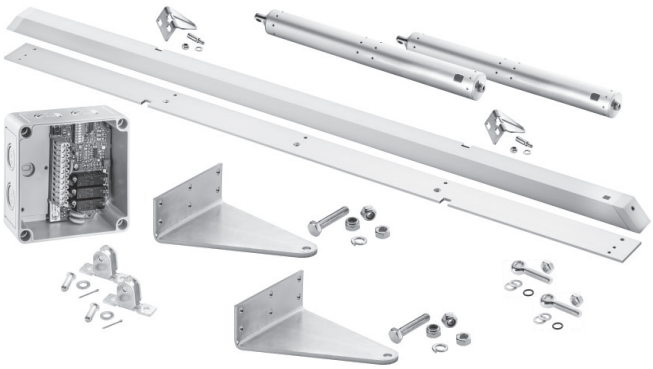

MOUNTING DIMENSION OF RWA 1100 FOR BOTTOM-HUNG / TOP-HUNG OUTWARD OPENING WINDOWS

Mounting dimension of RWA 1100 for bottom-hung / top-hung outward opening windows

Hardware set	Frame bracket	Stroke of the opening drive	CASEMENT CLOSED			Mounting dimension „X" (*1 (*2	FAH (NSK) (side closing edge)	Opening angle	Opening width	CASEMENT OPEN			Weight of the casement (max.)		Required spaceon the window frame		FAB (HSK)
			Angle of the drive force application	Applied force at the drive fixing point						Angle of the drive force application	Applied force at the drive fixing point						
				PL6	PL10						PL6	PL10	PL6	PL10	NSK	HSK	
			[DEG]	[N]	[N]	[mm]	[mm]	[DEG]	[mm]	[DEG]	[N]	[N]	[Kg]	[Kg]	[mm]	[mm]	[mm]
RWA 1100 (*3	K15	100	19	194	324	400	800	26	365	67	554	923	55	92	40	40	Depends of the used locking drive (*4
						500	900	23	360	64	537	896	60	100			
						600	1000	18	320	60	519	865	62	104			
		150	17	171	286	450	900	33	516	75	580	966	58	97		40	
						550	1000	28	479	69	559	932	61	103			
						650	1100	24	450	66	549	914	65	108			
						750	1200	21	429	63	536	894	67	112			
		200	15	153	255	500	1000	38	648	79	590	983	59	98	40	40	
						600	1100	32	608	74	577	962	63	105			
						700	1200	28	577	71	566	943	66	110			
						800	1300	25	554	88	600	999	74	123			
						900	1400	22	534	66	546	910	70	117			
		250	13	139	232	550	1100	41	778	82	595	991	60	99	40	40	
						650	1200	36	736	78	586	976	63	106			
						750	1300	31	704	74	576	961	66	111			
						850	1400	28	684	72	571	952	69	116			
						950	1500	25	657	69	559	932	71	118			
						1050	1600	23	638	67	552	921	72	121			
		250	12	127	211	600	1200	44	907	85	598	996	60	100	40	40	
						700	1300	39	861	80	591	985	64	106			
						800	1400	34	828	77	584	973	67	111			
						900	1500	31	799	74	576	960	69	115			
						1000	1600	28	777	72	569	948	71	119			
						1100	1700	26	756	70	563	938	73	121			
						1200	1800	24	742	68	557	928	74	124			
	K37	100	36	352	586	200	600	42	425	94	599	998	40	67	40	40	
						300	700	28	342	80	591	985	51	84			
						400	800	21	296	73	573	955	57	96			
		150	31	312	520	250	650	42	527	97	595	992	46	76	40	40	
						350	750	35	452	85	598	996	56	93			
						450	850	28	407	78	586	976	62	103			
						550	950	23	376	73	573	955	66	111			
		200	28	279	465	300	750	52	659	99	593	988	47	79	40	40	
						400	850	40	583	88	600	999	56	94			
						500	950	24	390	81	593	988	62	104			
						600	1050	28	499	76	583	972	67	111			
						800	1150	24	474	73	573	956	70	116			
		250	25	253	421	350	850	55	786	100	591	984	49	81	40	40	
						450	950	44	712	90	600	1000	57	95			
						550	1050	37	661	84	596	994	62	104			
						650	1150	31	622	79	589	982	67	111			
						750	1250	28	594	76	581	969	70	116			
						850	1350	25	573	73	573	956	72	120			
		300	23	231	384	400	1000	58	962	101	589	982	47	79	40	40	
						500	1100	47	879	92	600	999	55	91			
						600	1200	40	821	86	598	997	60	100			
						700	1300	35	775	81	593	988	64	106			
						800	1400	31	741	78	587	978	67	112			
						900	1500	28	713	75	580	967	70	116			
						1000	1600	25	693	73	574	957	72	120			

(*1 Mounting meaurse „**X**" = distance **F11** to **hinge side** (≥ 1/3 FAH)
(*2 Other mounting meaurse and wing heights on request

(*3 For the tandem sets RWA1100TE the drive forces and the max. window weigths will be correspondingly higher. At outward opening windows the opening drives force axis needs to pass the hinge axis on its outward side with min. 25 mm. The above indicated mounting dimensions are valid for profile depths <75 mm.

(*4 FV1 – 1x = 450 mm
FV1 – 2x = 1200 oder 2000 mm
FV1 – 3x = 2000 mm

Installation step 4c: Hole layout and planning for side-closing edge operation (inward opening)

Opening width and opening angle for inward opening windows

Side-hung casement
- inward opening

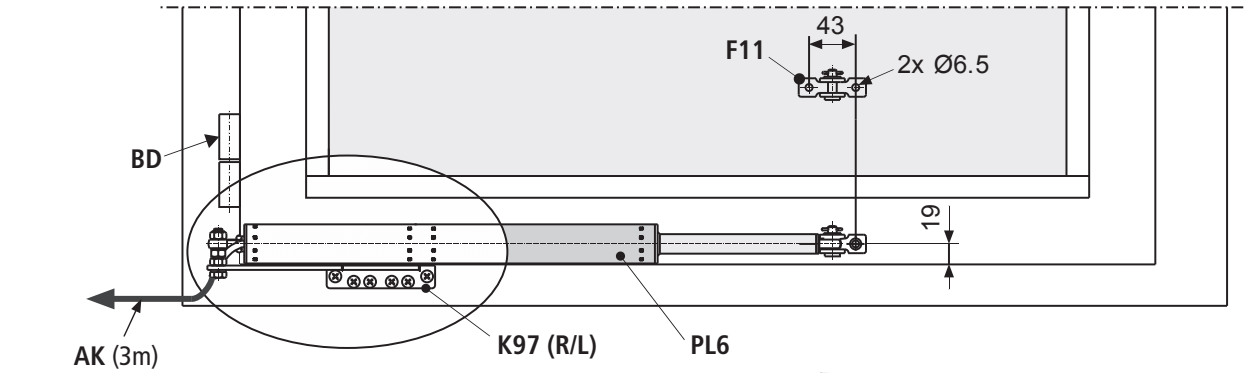

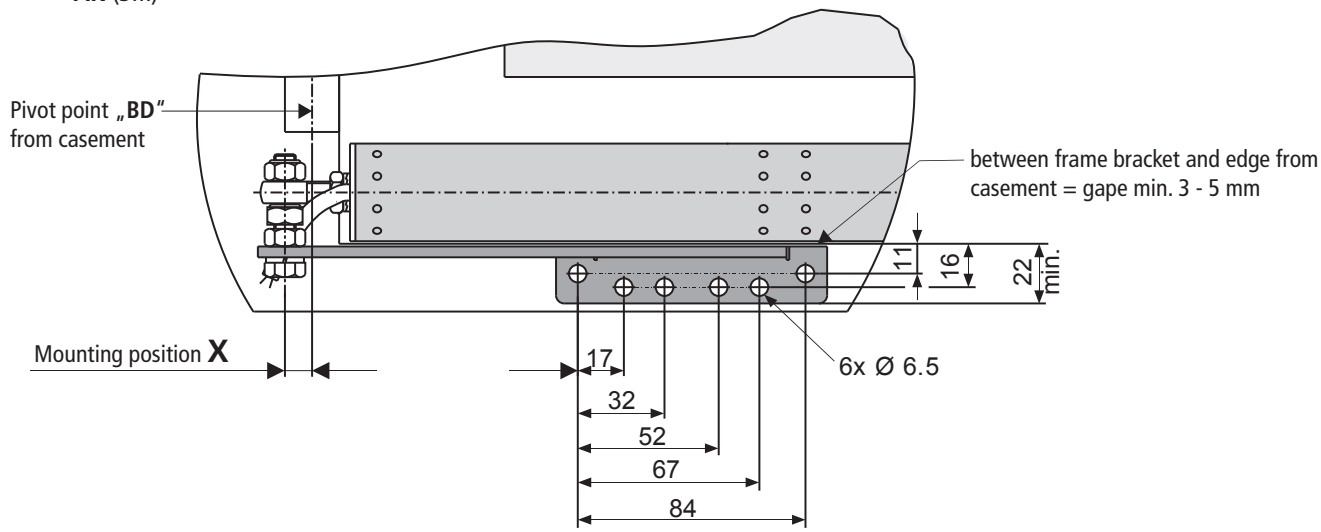

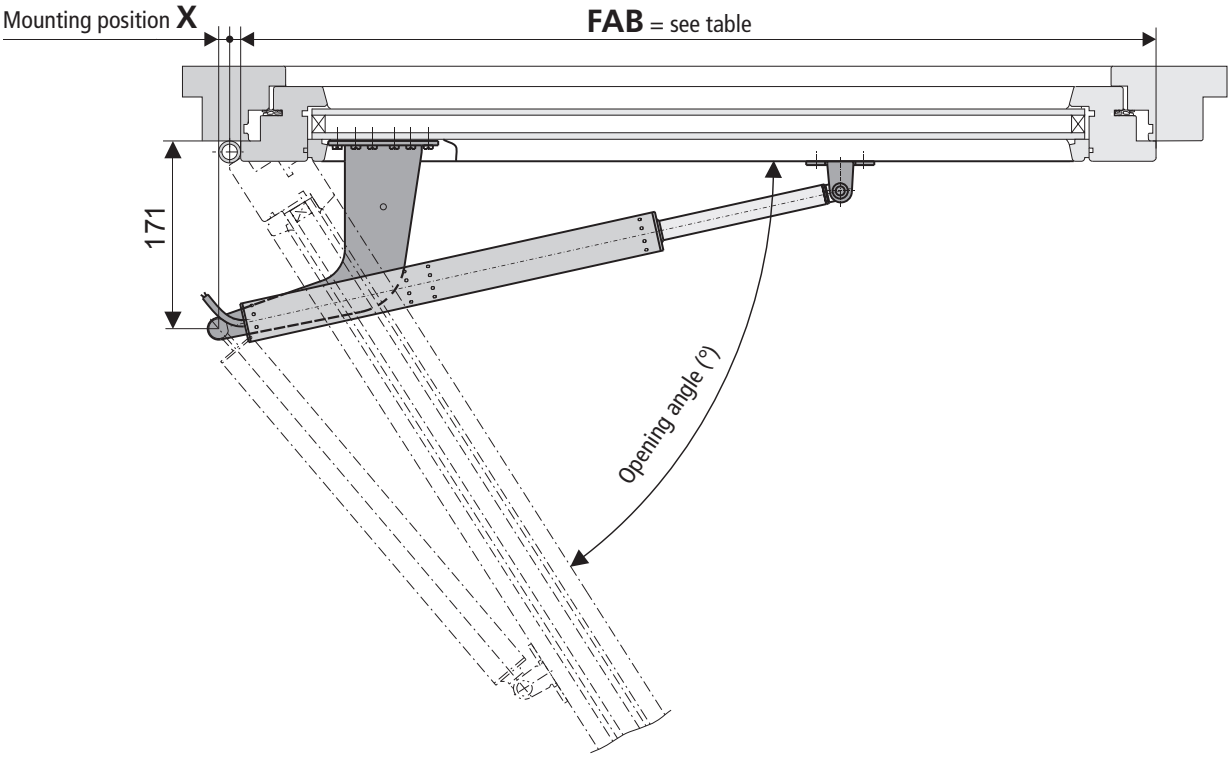

aumüller

MOUNTING DIMENSION OF RWA 1050 FOR SIDE-HUNG OPENING WINDOWS

Mounting dimension of RWA 1050 for side-hung inward opening windows

hardware set	Frame bracket	Stroke of the opening drive	CASEMENT CLOSED			Mounting dimension „X"	min. FAB (NSK) (side closing edge)	Opening angle	Opening width	CASEMENT OPEN			Weight of the casement (max.)		Required space on the frame		FAH (HSK)
			Angle of the drive force application	Applied force at the drive fixing point						Angle of the drive force application	Applied force at the drive fixing point						
				PL6	PL10						PL6	PL10	PL6	PL10	Hinge	NSK	
			[DEG]	[N]	[N]	[mm]	[mm]	[DEG]	[mm]	[DEG]	[N]	[N]	[Kg]	[Kg]	[mm]	[mm]	[mm]
RWA 1050 (*1	K97	100	19	167	279	0	510	35	(*2	16	163	272	90	130	10	22	500 – 1500
		150	13	139	232	20	600	55		11	112	187	90	130	30	22	
		200	11	119	198	40	680	75		6	60	100	90	130	50	22	
		250	10	103	172	80	740	85		6	60	100	90	130	90	22	

(*1 For the tandem sets RWA1100TE the drive forces and the max. window weigths will be correspondingly higher.
(*2 Depends on FAB

Special features RWA 1050

- For natural ventilation, smoke and heat exhausting and ferralux® NSHEV (EN12101-2)
- Siutable for inward opening side-hung windows
- Opening angles of 90° relized with short strokes and opening times due to the mounting of the spindle drives at an acute angle to the side closing edge and due to the displacement of the pivoted point of the frame bracket behind the mullion/transom construction
- Required space of only 20 mm for the mounting of the frame bracket on the side closing edge of the window frame profile
- Other combinations of various spindle drives in SOLO or TANDEM arrangements with locking actuators for actuating of window profile-specific hardware systems on request

Installation step 5: Assembly for side-closing edge operation - activation on NSK

- Determine fastenings.
- Produce drill holes with appropriate cross-section. For the mounting dimensions please refer to the above-mentioned hole layout drawings (see chapter „Installationstep 3 + 4“) or project-specific documents and drawings).

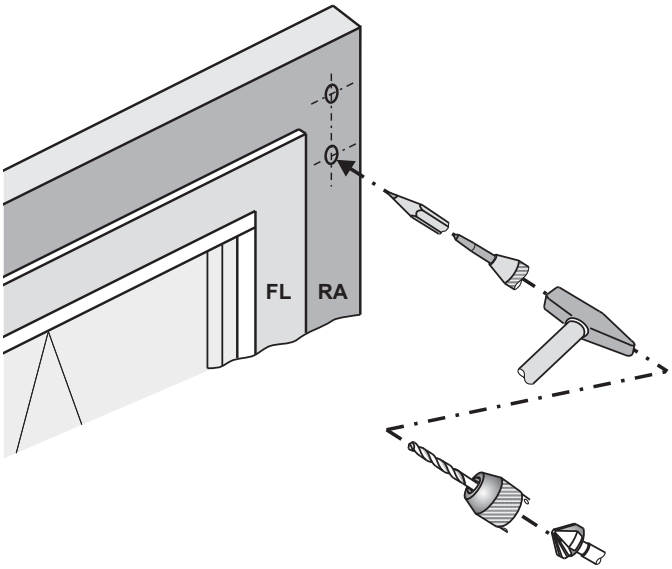

Carefully clear away drilling swarfs to prevent seals from being damaged.
Avoid surface scratches, for example by using masking tape.

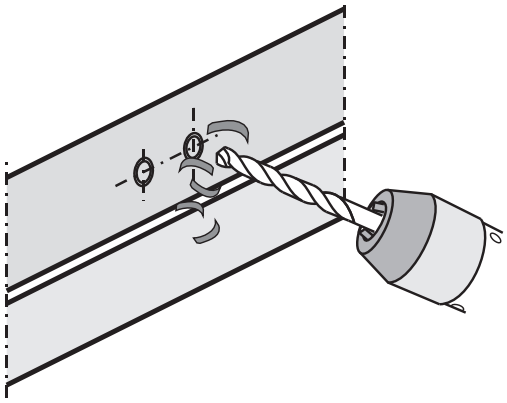

- Secure fasteners against loosening; i. e. by applying removable thread-locking compound such as “Loctite”.

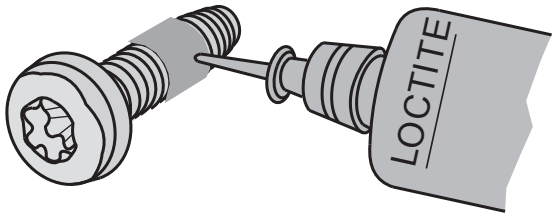

- Fit casement bracket **F11 / F13 ❶**.

Make sure it is parallel to casement edge.
„Casement bracket“ center and „spindle“ must be in line.

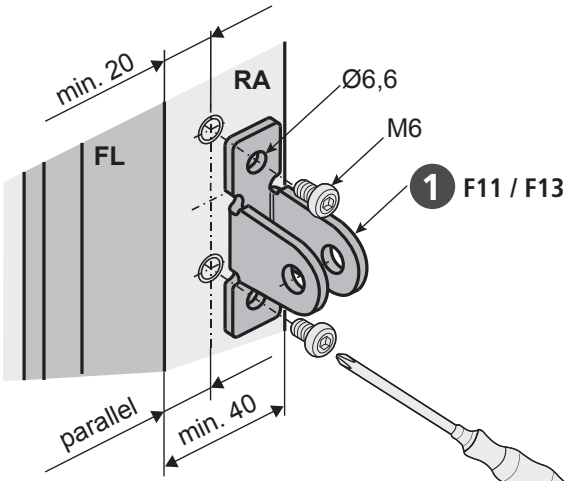

Equipment: Casement bracket F11 / F13 ❶		
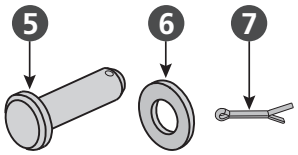	❺	1x bolt Ø8
	❻	1x washer
	❼	1x cotter pin

- Fit casement bracket **K15 / K37 / K97 ❷**.

Make sure they are parallel to casement edge.

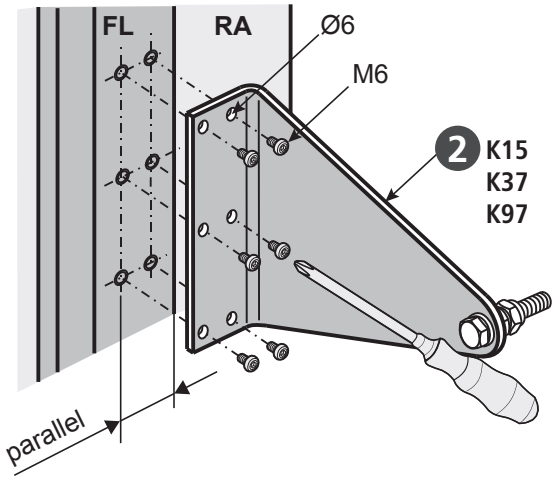

Equipment: Casement bracket K15 / K37 / K97 ❷		
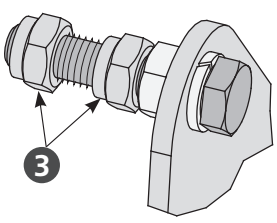	❸	2x even secure nut M8, with polyamide clamping part
		1x screw M8 1x spring washer 1x nut M8

- Attach drive to the frame bracket **K15 / K37 / K97** ❷ and tighten with both even secure nut ❸.

Note For easy mounting to frame brackets / casment brackets, move drives ~20 mm open. Operation only by using a test device and both drives at the same time.

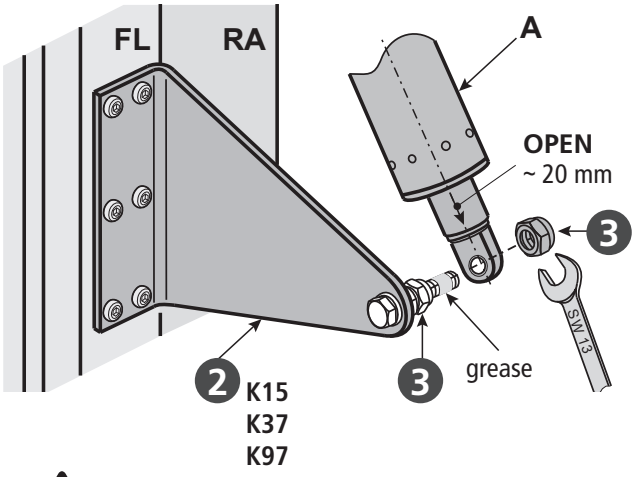

Ensure to align to the casement bracket ❶.

- Attach the drive to the casement bracket **F11 / F13** ❶. Note the cable position.
- Attach drive with bolt ❺.

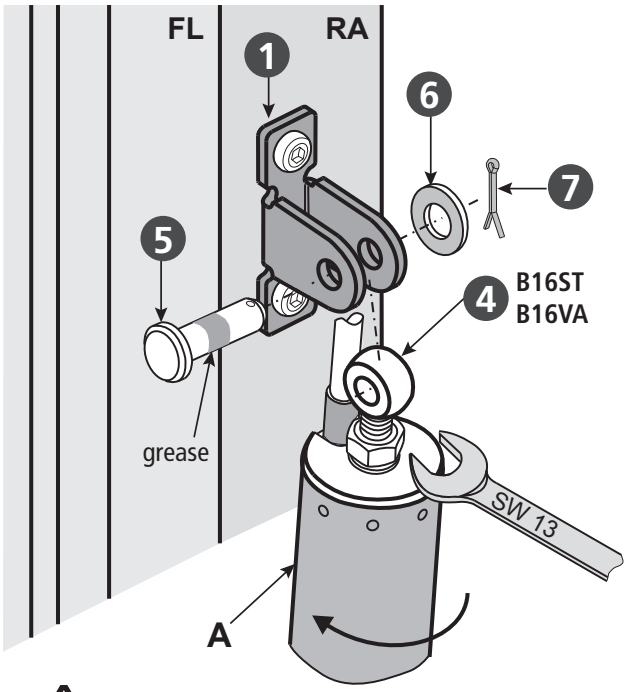

Slowly turn the drive clockwise.

- Secure bolt ❺ with washer ❻ and cotter pin ❼.
- Spread out the cotter pin ❼.

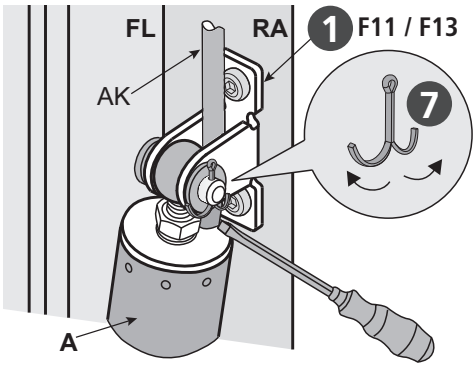

- Move drives to close the window.
- Adjust casement pressure - using eyebolt **B16** ❹.

Window must be fully closed.
Drive must be parallel to NSK.
Drive should freely turn in the frame bracket.

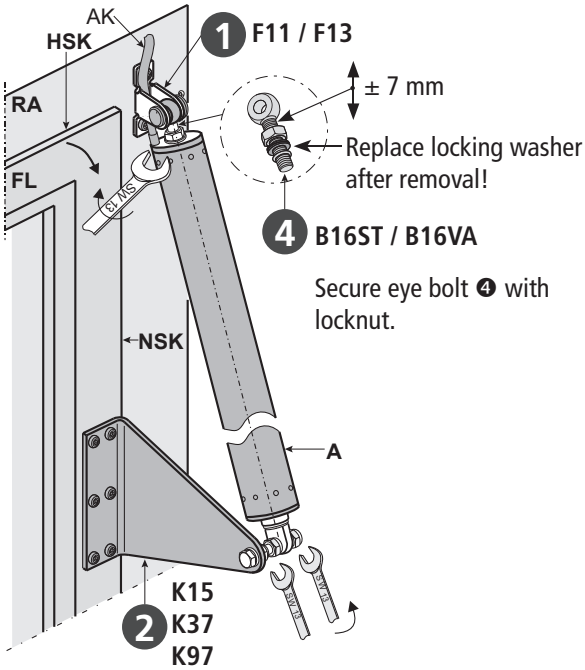

- To fit the second drive.

Fit both mounting bracket so that their axes are in line. Check contact pressure of casement.

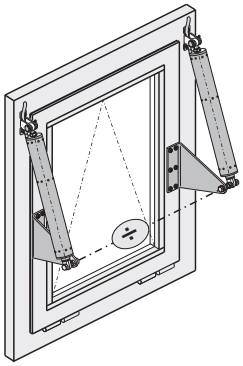

INSTALLATION STEP 6: ELECTRIC CONNECTION

Make sure when establishing the connection that there is no voltage at the terminals! Unused wires must be safely insulated!

The running direction of the drive may be changed by interchanging (polarity reversal) the wires **„BN – (brown)“** - **„BU – (blue)“**.

In tandem-, tridem-, quattro application, the drives are always supplied in the **set** and must be installed and operated as a **set**!

Drives must be switched by the controller to the opposite direction (pole reversed) when switched off at overload.

Drive version **„S1“** requires an external disconnection module **„KM“**.

Please observe description of the external control and regulation electronics and of the programming device.

Connection assignment — S1

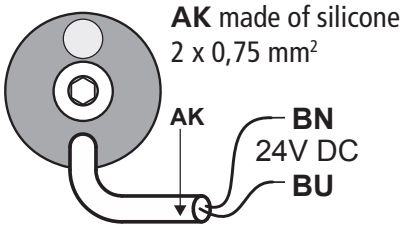

AK made of silicone
2 x 0,75 mm²

	↑	↓
BN	+	-
BU	-	+

Cable junction box (for renewal) — 24V

Order number:	**513344**
Application:	to extend a drive cable
Rated voltage:	only for low voltage to max. 50V DC/AC
Material:	stainless steel (V2A)
Protection class:	IP 40
Dimensions:	25 x 27 x 150 mm
Equipment:	with cable gland (grey) including strain relief, with loose ceramic terminals.

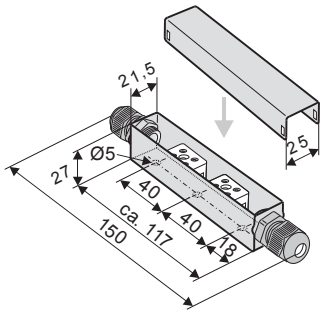

Wire colour coding	
Colour	**DIN IEC 757**
black	BK
white	WH
brown	BN
blue	BU
green / yellow	GN / YE
green	GN
violet	VT
grey	GY

Direction of travel

OPEN ↑

CLOSE ↓

polarity reversal

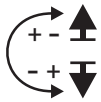

CONNECTION CABLE ROUTING

Connection cable routing on the drive body

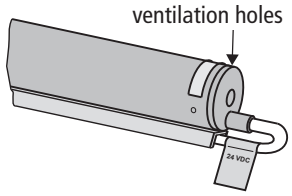

Cable channel does not stick through the ventilation holes.

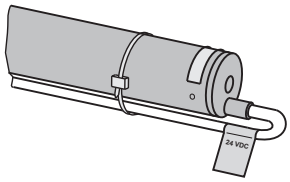

Cable duct glued on.	Attach connection cable with cable ties.

Control module: USKM — 24V

Order number:	**512140**
Application:	with 3 outputs and individual settuble cut-off current, monitored motion run, delayed sequence control.
Rated voltage:	24V DC +/- 20 %, (max. 2 Vpp)
Close circiut current:	< 50 mA
Connections:	max. 3 drives; s < 300 mm
Rated current per drive:	max. 2,5 A
Drive type:	S1, S2, S3, S12, MP, FV1, OFV1
Protection rating:	IP 54
Ambient temperature range:	0 °C ... +70 °C
Surface mount. plastic housing	110 x 110 x 66 mm

Motion-monitoring up to 3 drives, 2 sequential controls

DIP-Switches for settings, connection terminals: 2,5 mm²

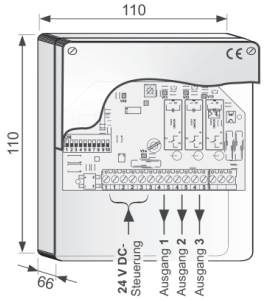

aumüller

INSTALLATION STEP 7:
SUPPLY LINES OF CONTROL UNIT TO THE DRIVES

Observe current regulations and guidelines e.g. DIN 4102-12 regarding the "Fire behavior of building materials-circuit integrity maintenance of electric cable systems" (E30, E60, E90) and the "Specimen Guideline on Conduits German designation - MLAR", and also prescribed constructional regulations!

RECOMMENDATION For safety reasons a cable of the next higher wire cross section should be selected.

Formula to calculate
the required wire cross-section of a supply line **24V**

$$A\ mm^2 = \frac{I_{A\ (total)} * L_{m\ (length\ supply\ line)} * 2}{2{,}0\,V_{(voltage\ drop)} * 56\ m / (\Omega * mm^2)}$$

Calculation example

Available data:
- cut-off current per drive (i. e. 2 x 4.0A) from data sheet
- length to be bridged from the last window to the control unit (i. e. 10 meters)

$$A = \frac{(2 * 4{,}0A) * 10m * 2}{2{,}0V * 56m / (\Omega * mm^2)}$$

A = 1,42mm² -> **1,5mm²** chosen

Laying and connecting the drive cable
- Avoid extreme temperature differences in the installation area (danger of condensation).
- Set clamping point close to window and ensure accessibility.
- Ensure expansion possibilities of the drive and the drive cable.
- Consider the cable length and the cross sections of the drives supply lines.

INSTALLATION STEP 8:
SAFETY CHECK AND TEST RUN

Check the mounted system for its safety; perform test run and commissioning.

Safety test:
- Connect operating voltage.
- Check fastening (frame brackets, casement brackets) for firm fit or tightening.

Test run:
- Visual inspection of casement movements.
- Stop immediately by malfunction!
- Pay attention to collision with facade construction and correct installation, if required.

Risk evaluation:
Before operating a power-operated window to which window drives were mounted, which were sold by the manufacturer as incomplete machines according to installation declaration, the possible risk to ahazard of persons must be determined, evaluated and minimized by taking appropriate technical measures in accordance with the Machinery Directive. Separate documents for performing a risk assessment can be downloaded from the homepage of

Firm AUMÜLLER AUMATIC GmbH
(**www.aumueller-gmbh.de**).

Operation of the power-operated window
When operating the power-operated window safety instructions must be observed, specifically those pertaining to commissioning, operation and maintenance.

Help in case of Malfunctions, Repairs and Maintenance

Professional repair of a defect drive can only be performed at the manufacturer's factory or manufacturer-certified specialist company. Unauthorized opening or manipulation of the drive terminates warranty.

1. Exchange defect drives or have them repaired by the manufacturer.
2. In case of problems during installation or normal operation the following table might be useful:

Problem	Possible causes	Possible solutions
Drive does not start	• Duration of mains power supply too short	• Adjust supply voltage as specified in the technical documentation
	• Drive run direction not correct	• Check drive cables change polarity
	• Connecting cable not connected	• Check all connection cables
	• Power supply / Control Unit voltage incorrect, too high or too low (see data sheet)	• Check power supply unit and replace if necessary
	• No mains supply to power supply unit / Control Unit (no voltage)	• Connect power supply
	• Drive has shut down on overload	• First move drive in CLOSE position
Drive doesn't start after having been in operation several times	• Operating time has been exceeded, drive has been overheated	• Wait until drive has cooled down and start again
	• See possible solutions above associated with „Drive doesn't start"	• See possible solutions associated with: "Drive doesn't start"

Maintenance and modification

To ensure continuous function and safety of the drive periodic maintenance by a specialist company is required at least once a year (as mandated by law for smoke and heat exhaust systems). Operational readiness must be checked regularly. Frequent inspection of the system for imbalance and signs of wear or damages of cables and fastening elements must be performed.
During maintenance contaminations must be removed from the drive. Fastenings and clamping screws must be checked for tightness. Test runs during the opening and closing procedure of the devices must be performed.
The drive itself is maintenance-free. Defect devices may only be repaired in our factory. Only replacement parts of the manufacturer may be used. When the connection cable of this device is damaged it must be replaced by the manufacturer or his customer service or a similarly qualified person to avoid endangerment.
It is recommended to conclude a maintenance contract. A sample maintenance contract can be downloaded from the homepage of

Firm Aumüller Aumatic GmbH
(**www.aumueller-gmbh.de**).

While cleaning the windows, drives may not have direct contact with water or cleaning agents. Drives must be protected from dirt and dust during the construction phase or renovations.

Maintenance process

1. Open or extend power-operated casement completely.
2. Completely disconnect the system from the mains and secure it against automatic or manual activation.
3. Check windows and fittings for damages.
4. Check all mechanical fastenings (if required, observe information on torques in installation instructions).
5. Check electric drives for damages and contaminations.
6. Check connecting cables (drive cable) for:
   - tightness of the cable screw
   - functionality of the strain relief
   - damages
7. Check the mobility of hinges and fittings and re-adjust or apply lubricant, e.g. silicone spray (observe the instructions of the manufacturer of this window system).
8. Check peripheral seal, remove contaminations or replace.
9. Perform cleaning to maintain functionality (e.g. clean extending elements of the drive, such as chains or spindles by damp wiping them with acid or lye-free agents and drying them and, if required, lubricate them with cleansing oil e.g., Ballistol).
10. Turn on operating voltage.
11. Open and close the power-operated window via the operating voltage (functional test).
12. If available, check and re-adjust protection systems of the safe guard fixture.
13. Check the intactness of the CE label at the power-operated system (e.g. SHEV/Natural smoke and heat exhaust ventilators).
14. Check the intactness of warning instructions and labels at the respective drive.
15. Perform a risk assessment in accordance with Machinery Directive 2006 / 42 / EG, if required, e.g. after modifying the machine.

Demounting

The drives are demounted by reversing the steps, as for the installation. The adjustments are omitted.

1. Completely disconnect the system from the power supply before demounting a drive.
2. After demounting a drive the window must be secured against independent opening.

Dispose of parts according to the locally applicable legal provisions.

Disposal

According to the European Directive 2012/19 / EU on Waste Electrical and Electronic Equipment (WEEE) and its transposition into national law, obsolete electrical appliances must be collected separately and sent for environmentally friendly recycling.

Liability

We reserve the right to change or discontinue products at any time without prior notice. Illustrations are subject to change. Although we take every care to ensure accuracy, we cannot accept liability for the content of this document.

Warranty and Customer Service

In principal apply our:

„General Terms for the Supply of Products and Services of the Electrical Industry (ZVEI)“.

The warranty corresponds with legal provisions and applies to the country in which the product has been acquired.
The warranty includes material and manufacturing defects incurred during normal use.

The warranty period for delivered material is twelve months.

Warranty and liability claims for personal injuries or material damages are excluded, if caused by one or more of the following:

- No proper incoming goods inspection.
- Improper use of the product.
- Improper installation, commissioning, operation, maintenance or repair of the product.
- Operating the product by defect and improper installed or not functioning safety and protection devices.
- Ignoring instructions and installation requirements in these instructions.
- Unauthorized constructional modifications at the product or accessories.
- Disaster situations due to effects of foreign bodies and Acts of God.
- Wear and tear.

Contact persons for possible warranty claims, for spare parts or accessories are the employees of the responsible branch office or the responsible person at

Firm Aumüller Aumatic GmbH.

Contact data are available at our homepage

(www.aumueller-gmbh.de)

Notes

Certificate and Declaration of Conformity

We declare under our sole responsibility that the product described under "Data sheet" is in conformity with the following directives:

- 2014/30/EU
  Directive relating to Electro-Magnetic Compatibility
- 2014/35/EU
  Low voltage Directive

We further declare that the drive is an incomplete machine within the meaning of the European Machinery Directive (2006/45/EG).

Technical file and declaration at firm:

Aumüller Aumatic GmbH
Gemeindewald 11
D-86672 Thierhaupten

Ramona Meinzer
Managing Director (Chairman)

Note:

The proof of the application of a quality management system is for company:

Aumüller Aumatic GmbH

according to the certification basis **DIN EN 9001** as well the "Declaration of Incorporation and Conformity" can be accessed via the QR code or directly on our homepage:

(www.aumueller-gmbh.de)

Translation of the original instructions (German)

Important note:
We are aware of our responsibility, which is why we present life-supporting and value-preserving products with greatest possible conscientiousness. Although we make every effort to ensure that the data and information are as correct and up-to-date as possible, we still cannot guarantee that they are free from mistakes and errors.
All information and data contained in this document are subject to alterations without prior notice. Distribution and reproduction of this document as well as the use and disclosure of its content is not authorized unless expressly approved. Offenders will be held liable for the payment of damages. All rights reserved in the case of a patent award or utility model registration.
Basically the General Terms and Conditions of **Aumüller Automatic** GmbH apply to all offers, supplies and services.

The publication of these assembly and commissioning instructions supersedes all previous editions.

AUMÜLLER AUMATIC GMBH
Gemeindewald 11
86672 Thierhaupten

Tel. +49 8271 8185-0
Fax +49 8271 8185-250
info@aumueller-gmbh.de

www.aumueller-gmbh.de

9000021001_V1.2_KW11/19